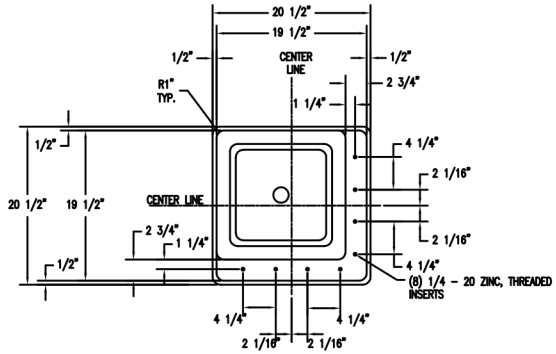

2 TOP VIEW TF5085
Scale: 1 1/2" = 1'

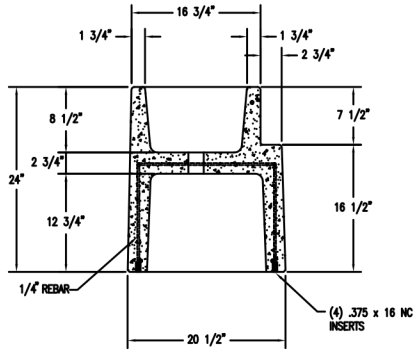

1 CROSS SECTION OF BENCH TF5085
Scale: 1 1/2" = 1'

REVISIONS						DRAWN BY MJK	JOB		MATERIAL CONCRETE
NO.	DATE	BY	NO.	DATE	BY	TITLE	JOB NO.		WEIGHT 425 LBS.
1			4			SCALE AS NOTED	UNLESS OTHERWISE SPECIFIED DIMENSIONS ARE IN INCHES ANGLES ±0.5° FRACTIONS ± 1/64" 2 PL ±0.01 3 PL ±0.005	DATE 4/20/11	FINISH OPTIONS
2			5						DWG. NO. TF5085
3			6						