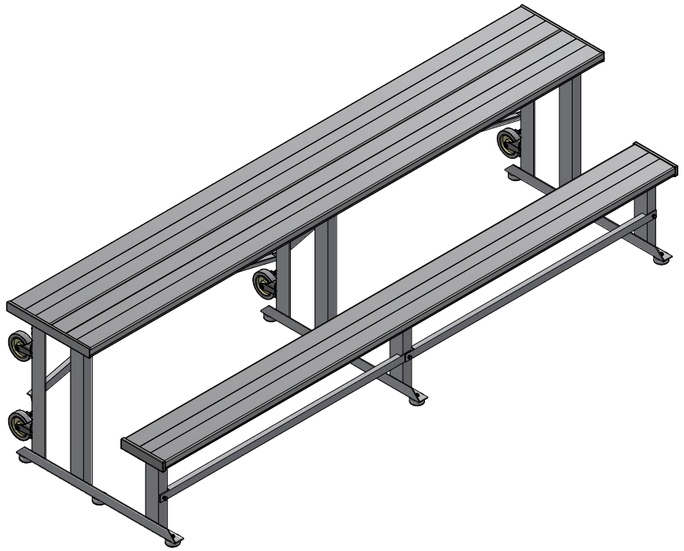

① RUBBER FOOT PAD ASSEMBLY

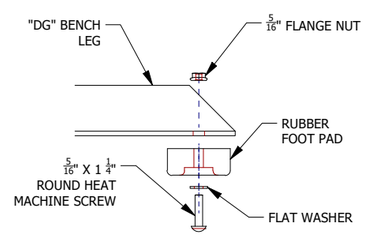

N.T.S.

② TYPICAL 2 X 10 PLANK ATTACHMENT

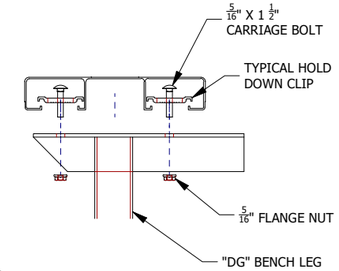

N.T.S.

③ TYPICAL 2 X 10 POLY END CAP ATTACH.

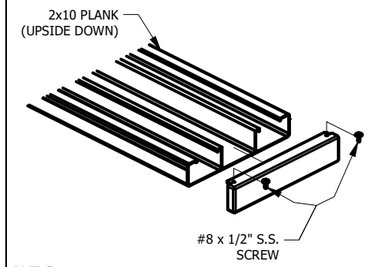

N.T.S.

④ TYP. DOUBLE 2 X 10 END CAP ATTACH.

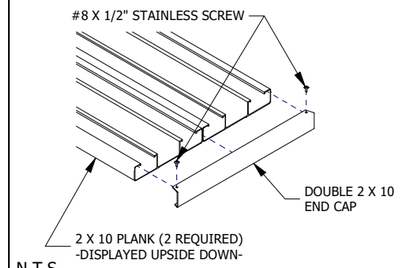

N.T.S.

⑤ TYP. BRACING ATTCHMENT

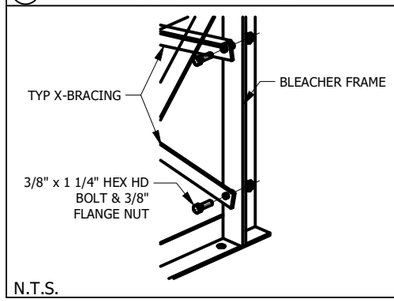

N.T.S.

⑥ CROSS BRACE CENTER CONNECT.

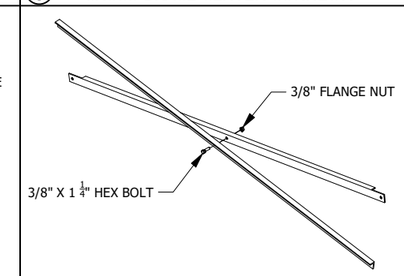

N.T.S.

⑦ CASTER ATTACHMENT

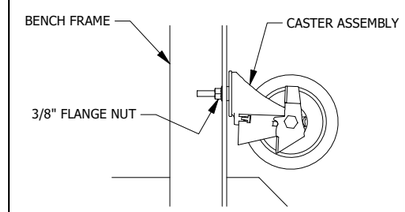

N.T.S.

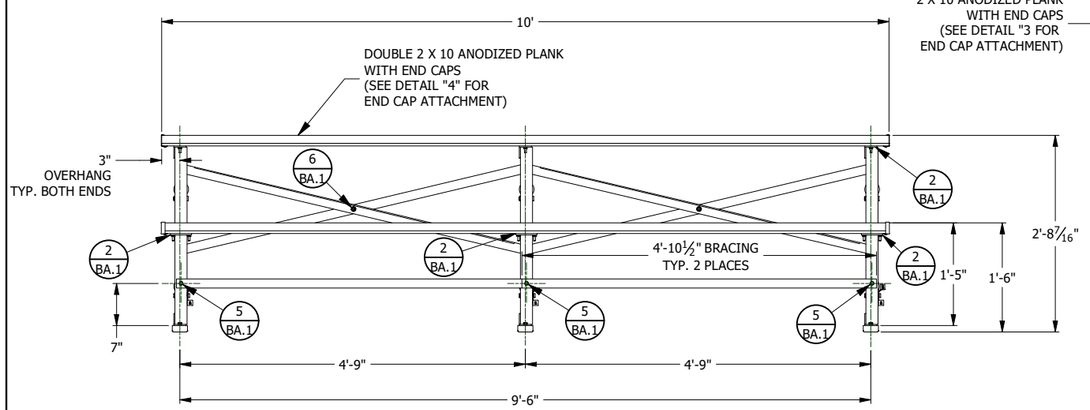

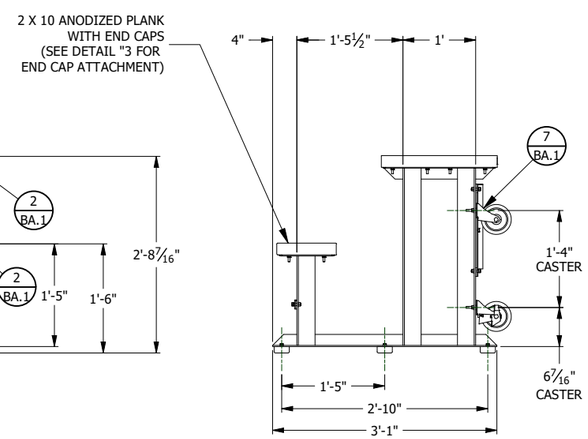

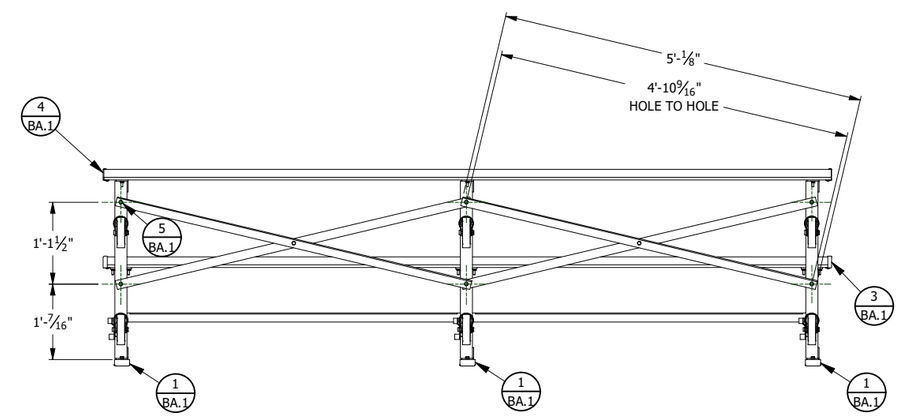

NRS National Recreation Systems
A PLAYCORE Company

THIS DRAWING AND ALL INFORMATION CONTAINED HEREIN IS THE PROPERTY OF NATIONAL RECREATION SYSTEMS, INC. AND IS NOT TO BE REPRODUCED WITHOUT EXPRESS WRITTEN PERMISSION OF THIS MANUFACTURER. WE ASSUME NO RESPONSIBILITY FOR UNAUTHORIZED USE OF THIS DRAWING. NATIONAL RECREATION SYSTEMS, INC. IS NOT RESPONSIBLE FOR LOCAL PERMITS AND OCCUPANCY REQUIREMENTS.

NATIONAL RECREATION SYSTEMS, INC.

MODEL: ST-TR01000

DESCRIPTION: STEP THRU SCORERS TABLE - 10'-0" - RUBBER FOOT PANS - CASTERS

DRAWN BY:	DATE:	REVISION	SCALE:	SHEET #:
VJHECK	10/21/2025	0	N.T.S.	BA.1